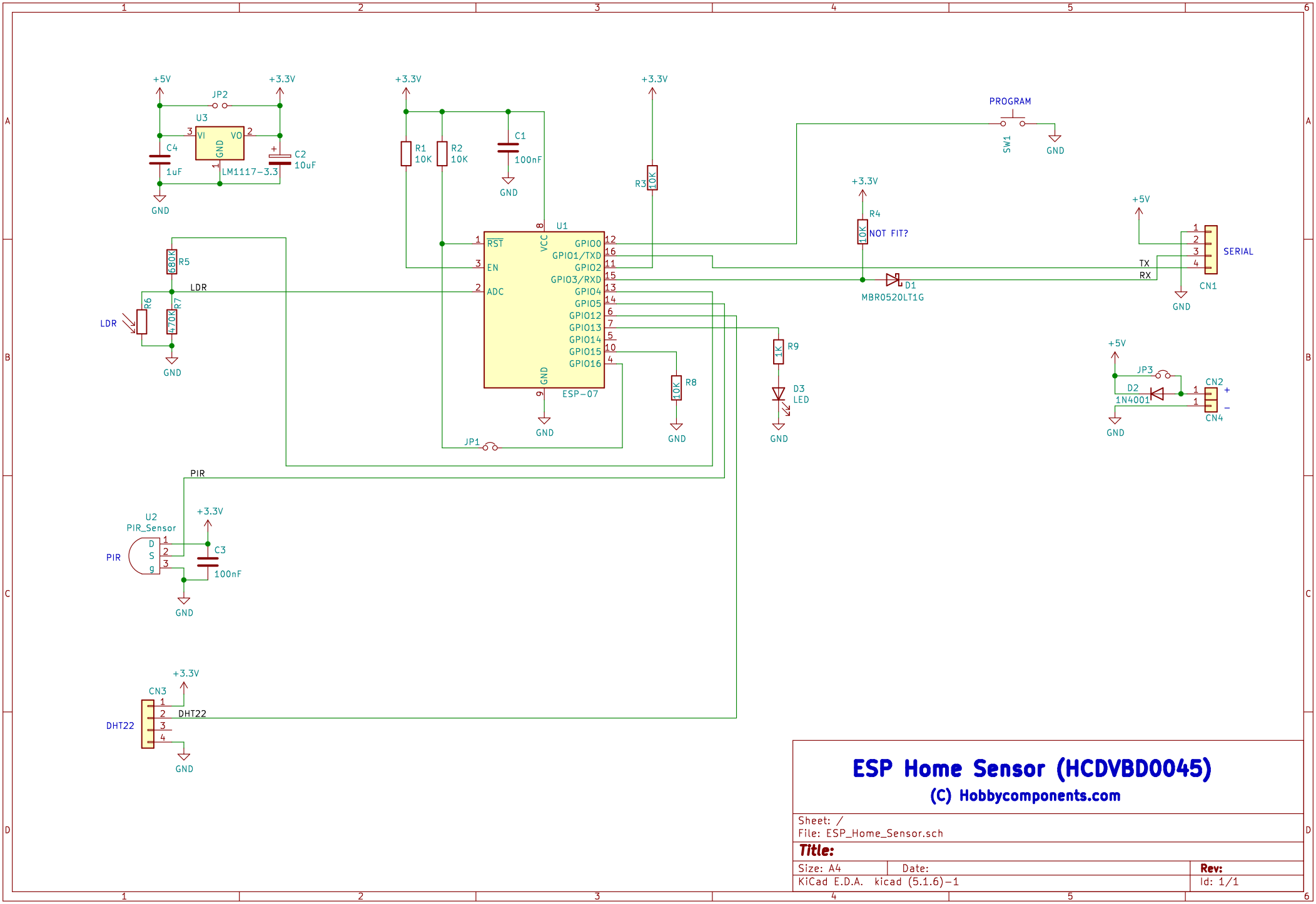

ESP Home Sensor (HCDVBD0045)

(C) Hobbycomponents.com

Sheet: /
File: ESP_Home_Sensor.sch

Title:

Size: A4	Date:	**Rev:**
KiCad E.D.A. kicad (5.1.6)-1		Id: 1/1